OTTO Professional Guide

Perfectly sealing joints in bathroom areas

Quality creates cohesion

SEALING & BONDING

Perfectly sealing joints

In bathroom areas in particular, it is crucial to perfectly seal all joints – this is the only way to protect the substrate from moisture penetrating. Faulty joints do not only cause damage to building material, but also harm human health, because we are particularly susceptible to mould infestation. Not to mention the fact that defective joints do not look nice.

Two things are important for sealing joints perfectly: first the right sealant and second using the sealant properly. Together, both result in durable joints that are highly functionally reliable. The applicable regulations, processing guidelines and recommendations on how to make perfect joints can be found in this professional guidebook.

Follow us on Social Media:

@OTTOCHEMIE

Hermann Otto GmbH
Krankenhausstr. 14
83413 Fridolfing, Germany
Tel.: +49 8684 908-0
info@otto-chemie.com
www.otto-chemie.com

Table of contents

With OTTO quick tip:
The right nozzle length

Basics

Applicable regulations ... 2
The different types of joints ... 3
The correct joint geometry ... 4
The tasks of a back-up foam rod ... 5
The reasons for renewing elastic joints ... 6
Select the correct sealant ... 7
Product Overview bathroom silicone ... 8
Product Overview natural stone silicone ... 9

Perfectly prepare joints

Remove the old sealant ... 10
Introduce the right back-up foam rod ... 11
Correctly cleaning the joint ... 12
The correct adhesion ... 13
Product Overview cleaner and primer ... 14

Perfectly shape joints

Select the correct smoothing tool ... 16
Determine the right nozzle length ... 18
Check and apply the sealant ... 20
Correctly using the smoothing agent ... 22
Correctly smoothing the sealant ... 23
Product Overview smoothing agents und accesories ... 24

Perfect service

OTTO App ... 26
OTTO Training sessions ... 27
OTTOFLEX® Compound sealing – perfect in a system ... 28
OTTO Quick tip:
The right nozzle length ... 29

Applicable regulations

Currently applicable regulations

- **IVD leaflet 3-1:** Structural design and sealing of joints in bathroom areas and in moisture-prone rooms – Part 1: Sealing with sprayable sealants
- **IVD leaflet 3-2:** Structural design and sealing of joints in bathroom areas and in moisture-prone rooms – Part 2: Sealing of bath tubs and shower trays with flexible sealing tapes
- **IVD leaflet 14:** Sealants and mould infestation
- **EN 15651 – Part 3:** Sealants for joints in bathroom areas
- **Technical data sheet for the sealant**

Structural design and sealing of a joint

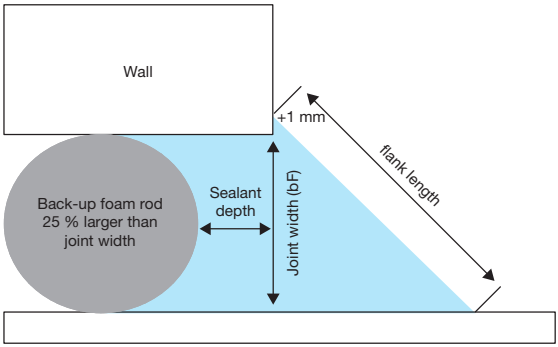

Which sealants comply with the regulations?
Find the right sealants quickly and easily with our product filter. Set a check mark under “Standards and tests” characteristics for the desired regulations and you will be shown only the products that match.

The different types of joints

Tray connection joints

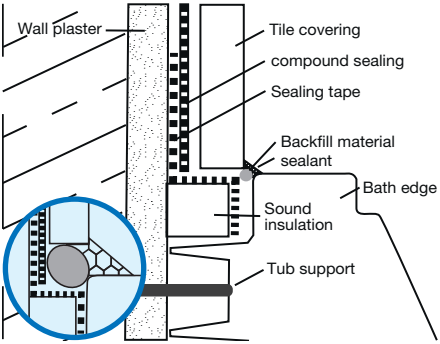

Floor joints

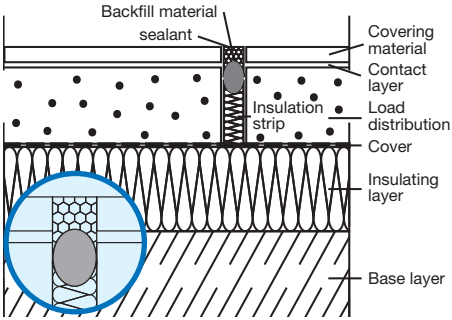

Wall joints

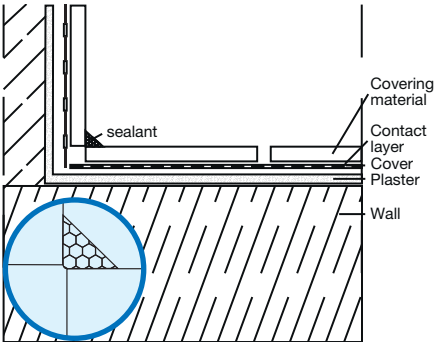

Edge joints (floor/wall)

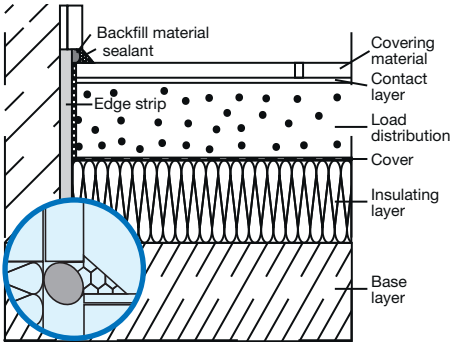

Want to know more?
You will find all of the relevant IVD leaflets on our website. The different types of joints in bathroom areas can be found in leaflet 3-1, part 5.

The correct joint geometry

The correct design

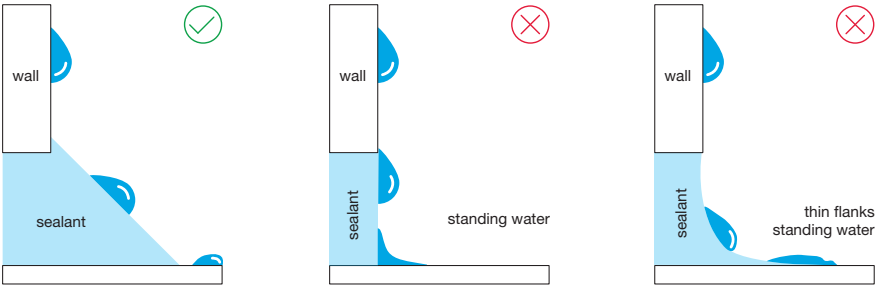

Triangular joint | Straight joint | Groove

The correct dimensioning

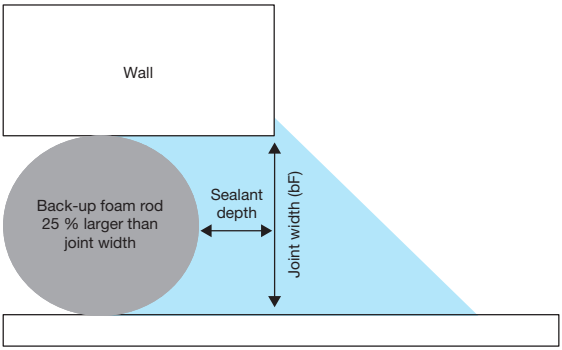

Joint width	Sealant depth
5 mm	5 mm
6 mm	6 mm
8 mm	8 mm
10 mm	8 mm
12 mm	8 mm
15 mm	10 mm

In bathroom joints, a joint width (bF) of at least 5 mm must be maintained.

The correct amount of sealant
On our website, you can calculate the required amount of your sealant in just a few clicks. Visit us at **www.otto-chemie.com/usage-calculator.**

The tasks of a back-up foam rod

The perfect restraint

Image 1: The sealant is pressed into the cavity without a back-up foam rod. Without a restraint or counterpressure:

- No unit can be formed and cracks occur
- No adhesion at the flanks can be formed
- The thickness cannot be dimensioned correctly

Image 2: Joint backfilled with back-up foam rod: The joint is filled from the bottom up and adheres to the flanks.

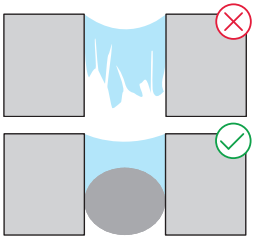

The right dimensioning

The optimal ratio of joint width to joint depth is an important prerequisite for having the longest possible service life of elastic grouting.

Image 1: Cohesive failure: Not enough sealant is present to absorb the expansion loads. The sealant cracks when it expands.

Image 2: Correct dimensioning: The sealant does not crack

Image 3: Adhesive failure: Increased risk of loss of adhesion between the sealant and component, since the sealant resists expansion too much.

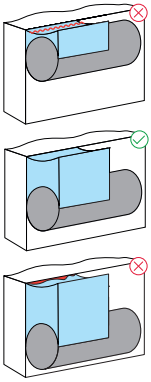

Avoid three-edge bond

Image 1 & 2: Without a back-up foam rod, a so-called three-edge bond occurs. This adhesion of the joint seal to three contact surfaces of components can mean that the plasticity of the sealant is limited (DIN 52460).

Image 3: A back-up foam rod decouples the substrate and prevents the sealant from coming into contact with tile adhesive that is not yet fully cured, for example, which can lead to problems in certain cases, such as with acetate-based sealants.

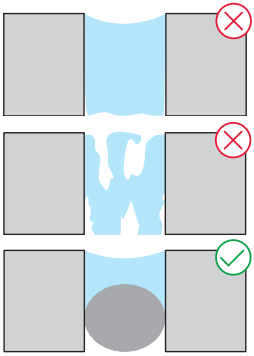

The reasons for renewing elastic joints

Old joints

In the simplest case, it is about an old sealant that needs to be renewed for visual reasons.

If it is damaged, the cause must be found. This is the only way a decision can be made as to whether the joint can be restored or whether consequential damage has already occurred that makes additional restoration steps necessary.

Damaged joints

These are the most common cases of damage:

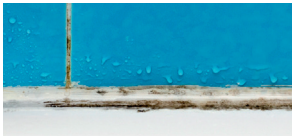

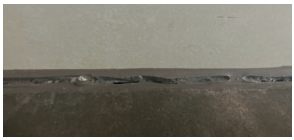

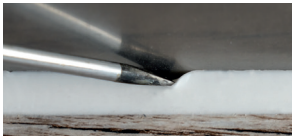

- **Mould**
  Causes of mould can be incorrect or insufficient ventilation of the rooms, an unsuitable sealant or an incorrect joint geometry. The cause needs to be found so the same type of damage does not occur again in the very short term.
- **Cracked sealant**
  The causes for this can be an incorrect joint dimensioning, a sealant that does not have enough expansion capability or a three-edge bond.
- **Detachment at flanks**
  An incorrect joint geometry can be the cause of this.
- **Loss of adhesion**
  The causes for this can be a damp substrate, a substrate that was not cleaned or was poorly cleaned, or a lack of primer.

What needs to be kept in mind during new construction?

During new construction, assess the joint suitability before introducing the sealant. Keep the currently applicable regulations in mind here.
The key points are:

- Is the joint correctly sized?
- Is the substrate suitable?
- Is the sealant used suitable for the application?

Select the correct sealant

Influences and regulations

When choosing the correct sealant, keep the influences and/or loads in mind as well as the currently applicable regulations.

Take the following influences into consideration:

- Effects of splashing water, wiping water and drain water
- Organic deposits, such as body care products or skin flakes
- Cleaning agents
- Abrasion (cleaning or mechanical cleaning)
- Hot water

Once a suitable sealant is found, take a look at the technical data sheet (standard and tests) to determine whether the sealant properties meet the specified requirements.

Which sealant is the correct one?
Use our application assistant to reliably find the right sealant for your project. Visit our website at **www.otto-chemie.com/construction/application-assistant.**

Product Overview bathroom silicone

OTTOSEAL® S 100

The premium bathroom silicone

★★★★★
PREMIUM

- **Excellent workability**
- Long-lasting joint
- Resistant to mould and bacteria

OTTOSEAL® S 105

The bathroom silicone

- **Very good workability**
- Long-lasting joint
- Resistant to mould

OTTOSEAL® S 18

The swimming pool silicone

SPECIAL

- **Resistant to chlorinated and salt water**
- Highly resistant to mould
- Very long-lasting joint

OTTOSEAL® S 125

The low-odour floor and sanitary silicone

- **Low odour**
- Resistant to mould
- Flexible use
- Long-lasting elastic joint

OTTO Anti-Mildew Spray

The anti-mildew spray

- **Removes mildew, fungus, algae and mould reliably and permanently**
- Ready for use
- Disinfecting

Sealants with mould infestation

The mould infestation of a joint is a very serious and complex issue, because under certain circumstances it can also lead to health impairments. For more information, visit our website at **www.otto-chemie.com/otto-anti-mould.**

Product Overview natural stone silicone

OTTOSEAL® S 70

The premium natural stone silicone

★★★★★
PREMIUM

- **Excellent workability**
- No migratory staining
- Very long-lasting joint
- Resistant to mould

OTTOSEAL® S 80

The low odour natural stone silicone

SPECIAL

- **Low odour**
- No migratory staining
- Very long-lasting joint
- Resistant to mould

OTTOSEAL® S 140

The hotel and spa silicone

SPECIAL

- **Double mould protection**
- Extremely resistant to mould and bacteria
- Very long-lasting joint
- Compatible with natural stone

OTTOSEAL® S 117

The natural stone silicone

- **Good workability**
- No migratory staining
- Resistant to mould

Want to know more?
You can find extensive details about each product on our website. You will find all available colours, application areas, data sheets, declarations of performance and tests there. Visit us at **www.otto-chemie.com** or easily download the **OTTO app**.

Remove the old sealant

- **The correct tool**
  The most important thing when removing the sealant is using a sharp blade. That is why it is recommended to change the cutter knife's blade before starting to work and to regularly stop work to replace it.
- **The correct position**
  The correct position of the blade allows for a precise and gentle guidance, preventing uncontrolled penetration into the joint that is too deep and damaging the composite sealing underneath.
- **Pressing the blade**
  Pressing the blade with your fingers gently removes the residual sealant from the substrate.
- **Caution with composite sealing**
  In bathroom areas, make sure that the underlying sealing is not damaged.
- **Correctly removing residue**
  Loose residual sealant or back-up foam rod must be removed with a brush, hex wrench and/or vacuum cleaner to obtain the optimal substrate for the new grouting.

The OTTO professional tip
To prevent injuries, we recommend wearing cut-resistant gloves and safety glasses when removing the old material.

Introduce the right back-up foam rod

- **Determine the size**
  The back-up foam rod should be approximately 20 % – 30 % larger than the joint width (DIN 18540).
- **Select the back-up foam rod**
  In bathroom areas, only use closed-cell back-up foam rods made from polyethylene (PE), since this material does not absorb any moisture (sponge effect promotes the formation of mould).
- **Introduce the back-up foam rod correctly**
  It must be introduced into the joint without being physically damaged so that there are no bubbles form inside the sealant (as a result of outgassing of the damaged back-up foam rod).
- **If there is not enough space**
  If there is not enough space for a back-up foam rod, use a PE film in line with DIN 18540.

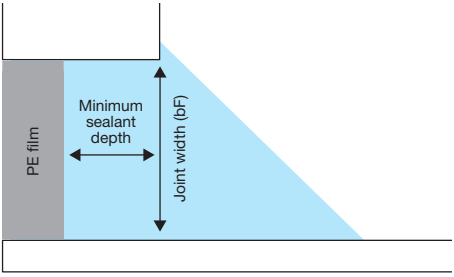

Why use a back-up foam rod?
There are several reasons why a back-up foam rod should be used. You will find more information in this guidebook at Page 5 and in our application video.

Correctly cleaning the joint

The joint flanks must be load-bearing on their own as well as:

- **Dry**
  If the joint was wet cleaned, it must be dried or you need to wait until the joint has dried out. Otherwise moisture can infiltrate and adhesion may be impaired.
- **Dust-free**
  After removing the old material, it is recommended to vacuum-clean the joint.
- **Grease-free**
  Apply OTTO Cleaner T to clean the joint by wiping only in one direction towards you using pressure (do not wipe back and forth! Wiping only spread the residual sealant around and does not remove it).

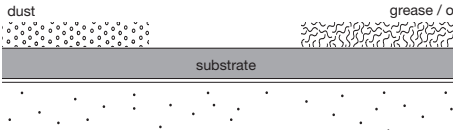

The OTTO professional tip
Use our Cleaner T together with lint-free cloths. These prevent paper residue from sticking in the joint.

The correct adhesion

In addition to cleaning, some surfaces also require preparation with a bonding agent (primer) so that the sealants can optimally adhere to the substrate.

- Every sealant is equipped with a selection of “universal primers,” as otherwise it would not adhere to any surface.
- For special surfaces, however, it can happen that these universal primers are insufficient and an additional bonding agent is needed.
- Whether and which primer is needed for a certain surface can be found in the sealant technical data sheet (TDS).

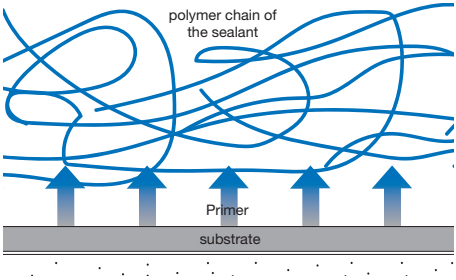

Surface treatment – what are the advantages?

- Improved wetting capability
- Improved adhesion
- Increased long-term resistance

Product Overview cleaner and primer

Cleaner

- **OTTO Cleaner T**
  The universal cleaner

Cleanprimer

- **OTTO Cleanprimer 1226**
  The special cleanprimer
- **OTTO Cleanprimer 1101**
  The adhesion improver

Primer

- **OTTO Primer 1102**
  The sandstone primer
- **OTTO Primer 1105**
  The viscous mineral primer
- **OTTO Primer 1215**
  Very low viscosity mineral primer
- **OTTO Primer 1216**
  The primer for natural stone and metal
- **OTTO Primer 1217**
  The silicone-plastic primer
- **OTTO Primer 1218**
  The primer for continuously wet conditions
- **OTTO Primer 1225**
  The highly viscous universal primer
- **OTTO Primer 1227**
  The primer for plastic

Select the correct smoothing tool

Joint width	Minimum sealant width (+ 1 mm)	Minimum flank length	Smoothing tool	No. of designed flank length
3 mm	4 mm	5.7 mm	OTTO Fugenfux	6.3
4 mm	5 mm	7.1 mm	OTTO Fugenboy small	8
			OTTO Fugenfux	8.3
5 mm	6 mm	8.5 mm	OTTO Fugenfux	10
6 mm	7 mm	9.9 mm	OTTO Fugenfux	10
			OTTO Fugenboy large	11
7 mm	8 mm	11.3 mm	OTTO Fugenboy large	14
8 mm	9 mm	12.7 mm	OTTO Fugenboy large	14
9 mm	10 mm	14.1 mm	OTTO Fugenboy large	17
10 mm	11 mm	15.6 mm	OTTO Fugenboy large	17
11 mm	12 mm	17.0 mm	OTTO Fugenboy large	17

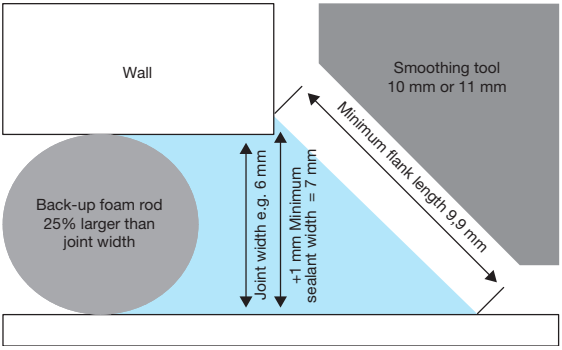

The OTTO professional tip

The smoothing tool should protrude at least 1 mm beyond the edge of the joint to ensure the flank adhesion of the sealant.

- **Concave shape**
  PU, silicone and hybrid sealants have approximately 3 – 5% shrinkage. The smoothing tool is curved inward slightly to compensate for this (concave).

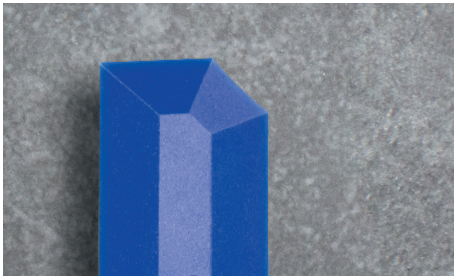

- **No 90° angle**
  Most smoothing tools do not have a 90° angle, but rather are 87° – 89°. That is why the smoothing tool must be slightly angled to achieve a perfect result.

- **Free of impurities**
  Cured sealant residue on the smoothing tool causes unsightly grooves on the surface of the sealant, which at the same time promote the depositing of organic material and thus the formation of mould.

Want to know more?
Do you want to see how a professional does it, what tips and tricks there are and what needs to be kept in mind? Then watch our processing videos or book a processor training at OTTO.

Determine the right nozzle length

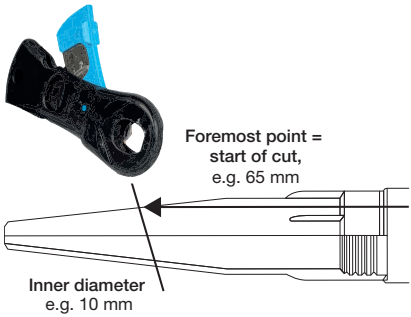

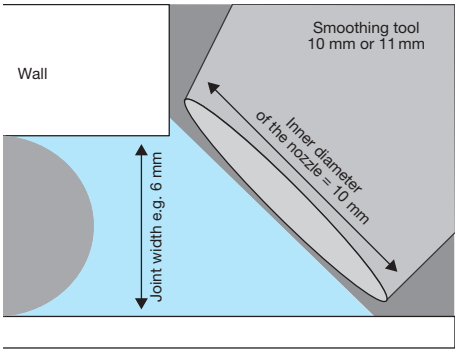

Nozzle with a short nose piece

Internal diameter	Nozzle length
4 mm	102 mm
5 mm	96 mm
6 mm	90 mm
7 mm	84 mm
8 mm	78 mm
9 mm	71 mm
10 mm	65 mm
11 mm	59 mm
12 mm	53 mm
13 mm	47 mm

Nozzle with a long nose piece

Internal diameter	Nozzle length
4 mm	98 mm
5 mm	91 mm
6 mm	85 mm
7 mm	78 mm
8 mm	71 mm
9 mm	65 mm
10 mm	58 mm
11 mm	51 mm

The OTTO professional tip

To tell whether this is a long or short nose piece, the nozzles are inserted into each other. If they fall apart again, these are nozzles with a long nose piece.

- **Mark the correct length**
  Measure the required length and mark it with a waterproof pen.

- **Cut the nozzle off at an angle**
  Ideally, cut the nozzle off at the marked position using a cartridge cutter. This automatically creates the correct angle. Take the nozzle cutter in your left hand, because only one side of the cartridge cutter is angled.

- **Mark the highest point**
  The highest point of the nozzle is marked in order to reach a symmetrical application of sealant later on.

The OTTO professional tip
The inner diameter of the nozzle should approximately correspond to the flank length of the smoothing tool. This means the correct amount of sealant is introduced.

Check and apply the sealant

- **Check the sealant**
  We recommend only using sealants before the expiration date. Place the cartridge in the cartridge gun and extrude the first 2 cm of sealant to remove any curing or separation. Test the viscosity to get a feel for the material.

- **The angle between the floor and wall**
  This angle should (in the case of right-angled walls) be 45° so that equal areas of the floor and the wall are covered with the sealant.

- **The angle to the joint**
  This angle depends on how much of an angle you have cut the nozzle at. If the nozzle was cut almost straight across, a very steep angle, nearly 90°, will be needed so as not to introduce too much sealant. If the nozzle is cut at a very sharp angle, the angle will be pretty shallow so that the tip does not remove the sealant from the joint again.

The OTTO professional tip
The line at the highest point on the nozzle helps you to correctly align the nozzle to achieve a symmetrical application of sealant.

- **Not enough sealant**
  The joint is not completely filled. The sealant does not optimally adhere at the flanks.

- **The correct amount of sealant**
  The sealant is level with the rear nozzle edge and the joint is therefore completely filled.

- **Too much sealant**
  The sealant swells out before and after the nozzle and then smears on the substrate when smoothed off.

Why do our professionals work with the OTTO hand-operated gun H 27?
The OTTO hand-operated gun H 27 can not only be used for many different applications, but is also very easy to operate. Low, medium and highly viscous sealants and adhesives can be worked with its switchable transmission ratio from 12:1 to 25:1. And thanks to the after-run stop, not a drop is wasted.

Correctly using the smoothing agent

System	Mixture
Acrylic	Water
Hybrid	20% smoothing agent concentrate / 80% distilled water or smoothing agent spray
PU	Standard smoothing agent or 25% smoothing agent concentrate / 75% distilled water **For natural stone:** Natural stone smoothing agent
Silicone	

Notes regarding use

- Shake well before use.
- Please check compatibility to adjacent surfaces, e.g. coated wood, before use by making preliminary tests.
- On sensitive surfaces please always use fresh smoothing agent and apply it sparingly.
- Sealant should not remain on the sealant joint and on adjacent surfaces. Residue must be rinsed off using distilled water before it dries. It is easiest to use a spray bottle to do this.
- Dermatologically tested for skin tolerance.

Why should a smoothing agent be used?
A smoothing agent should be used to avoid damage to or spots on the sealant surface. Visit our website to learn all about this topic, including tips and tricks.

Correctly smoothing the sealant

- **The wrong position**
  There is a gap between the wall/floor and the smoothing tool.

- **The correct position**
  Horizontal and vertical angle: There is no gap visible between the wall/floor and the smoothing tool.

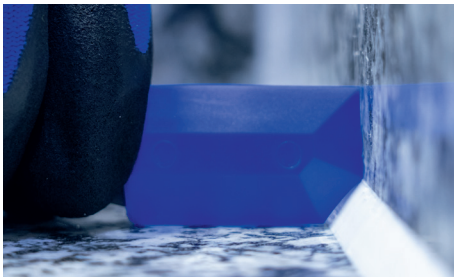

- **Correctly shaping the corners**
  To create a perfect corner, the corner should be formed in the sequence and shape as shown in the image on the left.

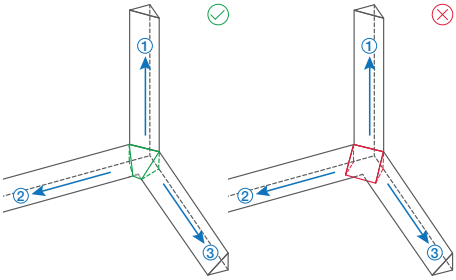

Why should the smoothing tool be tilted in the direction of smoothing off?
The smoothing tool should be tilted so that the sealant is pressed into the joint and points that are not completely filled are filled in. Watch our application videos for more.

Product Overview smoothing agents und accesories

Smoothing agent

- OTTO Smoothing Agent
- OTTO Concentrated smoothing agent
- OTTO Natural stone smoothing agent
- OTTO Smoothing agent spray

Processing tool

- OTTO Fugenfux® for sanitary and floor joints
- OTTO Fugenfux® Multitool
- OTTO Fugenboy large
- OTTO Fugenboy small

Guns

- OTTO Hand-operated gun H17
- OTTO Hand-operated gun H27
- OTTO Hand-operated gun H37
- OTTO Accumulator gun Type HPS-4T

Accesories

- OTTO Screw cap
- OTTO Corner piece
- OTTO Cartridge nozzles rotatable
- OTTO Cartridge cutter
- OTTO Cleaning wipes

Additional products

- OTTO Anti-Mildew Spray
- OTTO SilOut

Back-up Foam Rod

- OTTOCORD PE-B2

OTTO App

Whether iOS or Android:
With the OTTO app for smartphones and tablets you always have the solution to all application issues at your side. Product search, consumption calculator, colour recommendation, order, contact – and if you wish to be informed in good time about the latest news, simply activate push notifications.
Download now via the App Store or Google Play.

- **All product information is available at all times**
- Many useful services regarding sealing & bonding
- For Android and iOS

Download now

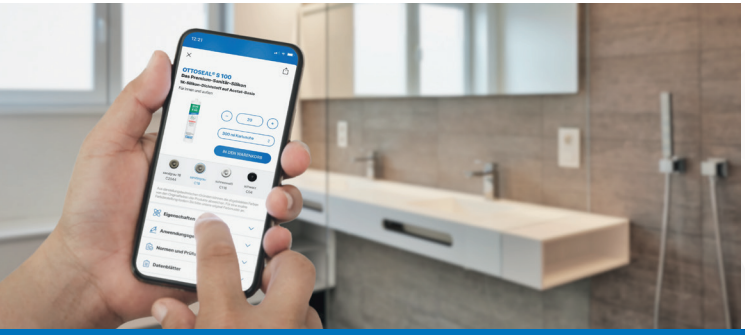

OTTO 360°

OTTO Training sessions

Do you need a custom training tailored precisely to your applications and areas of use? No matter whether on site at your company or at our fully equipped training centre in Fridolfing, our experienced trainers will make sure that you are always up to date in all matters relating to sealing and bonding. In our YouTube video, you will get a small insight into our training sessions.
Find out more now and sign up!

- **Conveyed knowledge and technical expertise**
- Exciting content
- Theory and practical applications

Find out more now

OTTOFLEX® Compound sealing – perfect in a system

OTTOFLEX® Protective coating

The ready-to-use composite sealing

OTTOFLEX® Sealing strip

The time-saving composite sealing

OTTOFLEX® Slurry seal coating

The heavy-duty composite sealing

OTTOFLEX® Sealing and decoupling strip

The decoupling composite sealing

You will find more information on our website or in our OTTOFLEX® print media.

OTTO Quick tip: The right nozzle length

OTTO Quick tip

The inner diameter of the nozzle should approximately correspond to the flank length of the smoothing tool. This means the correct amount of sealant is applied.

Use the table below to very easily determine at which point the nozzle needs to be shortened to achieve the desired inner diameter.

Please note that there are two different nozzles in the OTTO range: with a long and short nose piece. Nozzles with a long nose piece fall apart again when inserted into each other.

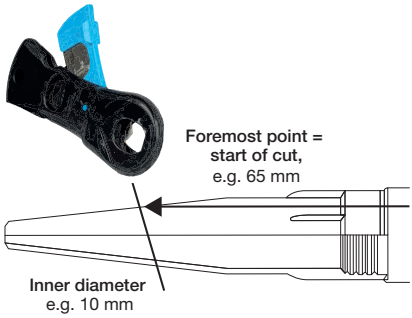

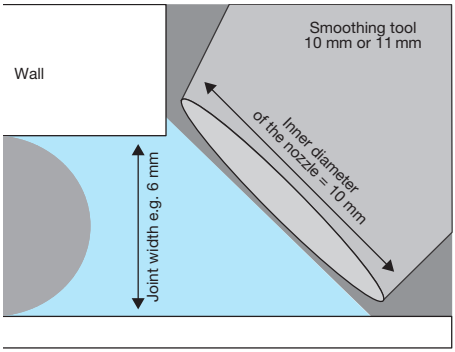

Nozzle with a short nose piece

Internal diameter	Nozzle length
4 mm	102 mm
5 mm	96 mm
6 mm	90 mm
7 mm	84 mm
8 mm	78 mm
9 mm	71 mm
10 mm	65 mm
11 mm	59 mm
12 mm	53 mm
13 mm	47 mm

Nozzle with a long nose piece

Internal diameter	Nozzle length
4 mm	98 mm
5 mm	91 mm
6 mm	85 mm
7 mm	78 mm
8 mm	71 mm
9 mm	65 mm
10 mm	58 mm
11 mm	51 mm

Hermann Otto GmbH
Krankenhausstr. 14 · 83413 Fridolfing, Germany
Tel.: +49 8684 908-0 · info@otto-chemie.com · www.otto-chemie.com

Front Desk

+49 8684 908-0
+49 8684 908-1840
info@otto-chemie.com

Monday to Thursday from 7:00 am – 4:00 pm
and Friday from 7:00 am – 1:00 pm

Product and Application Consulting

+49 8684 908-4300
+49 8684 908-1830
technical.service@otto-chemie.com

Monday to Thursday from 7:00 am – 4:00 pm
and Friday from 7:00 am – 1:00 pm

Orders

+49 8684 908-3300
+49 8684 908-1810
order@otto-chemie.com

Monday to Thursday from 7:00 am – 4:00 pm
and Friday from 7:00 am – 1:00 pm

For information relating to certification marks, please see **www.otto-chemie.com** under the heading "Information on Certification Marks". The requirements and test criteria of the DGNB and LEED can be found on **www.dgnb.de** and **www.german-gba.org**. Please note that these companies do not evaluate our individual products, but the sustainability as a whole of each complete building project.

The information in the present document corresponds to the status quo on going to print, (refer to the index on the outside back cover). With a new edition this edition becomes invalid. Due to the many possible influences during and after application, the customer always has to carry out trials first. Please observe the respective technical data sheet! This information is available on the Internet at **www.otto-chemie.com**. Errors and typographical errors are excepted.

Index: 9999566-GB | 28.09.2026 | © Hermann Otto GmbH 2026

Follow us on Social Media:

@OTTOCHEMIE

SEALING & BONDING